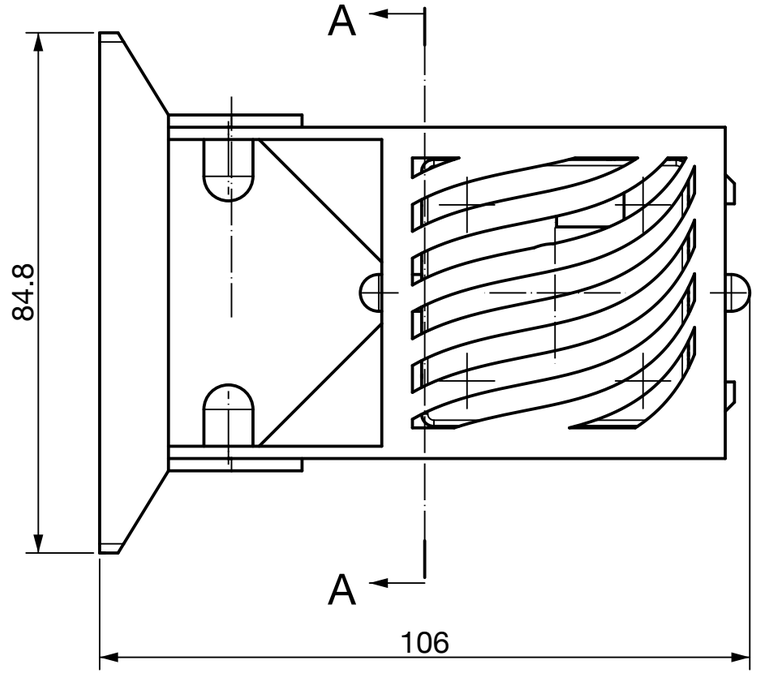

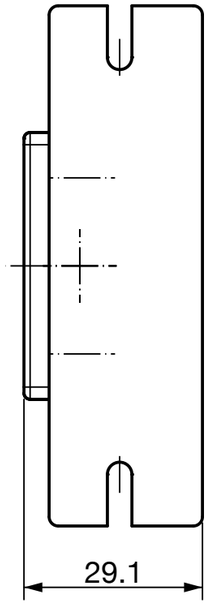

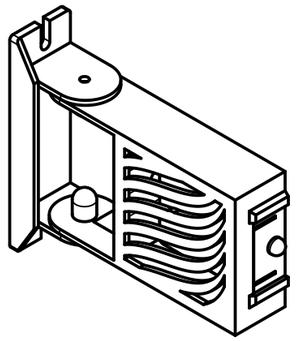

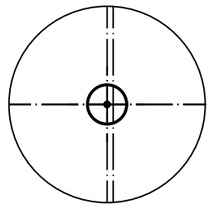

B (2 : 1)

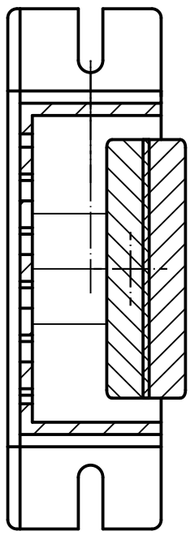

A–A

Item	Qty	Designation	Part number	Material
5	1	Slide-in-wall	Slide-in-wall	
4	1	Rail mount	Rail mount	
3	1	Frame	Frame	
2	1	Box Back cover	Box Back cover	
1	1	Box Front cover	Box Front cover	

Responsible dept.	Technical reference	Created by: LocalCAD	Approved by
Scale: 1 : 1	General tolerances: ISO 2768-m	Document type: Assembly drawing	Document status: Draft
Legal owner: LocalCAD	Material: PLA Mass	Title: Case	
	Format: A3 / Units: mm	Identification number: LC-ENC-0012	Rev. / Date of issue: 2026-11-21 / Sheet: 1/1